vestolit

Profiles & Pipes

The ideal choice considering its versatility, affordability, mechanicals and safety properties

orbia
Advancing life together

Polymer Solutions

Content

Image 1: PVC Window profiles

Profiles & Pipes

Both in the production of rigid profiles, ceiling, windows, fences, sidings and the production of different forms of pipes, fittings, hoses PVC is the ideal choice considering its numerous material qualities.

Also present in the production of fittings, gaskets and adhesives, PVC ensures many advantages for pipes and extruded profiles. Whilst also being cost-efficient, the material excels in terms of durability, chemical resistance, recyclability, low maintenance costs and easy and flexible design in the two main application fields.

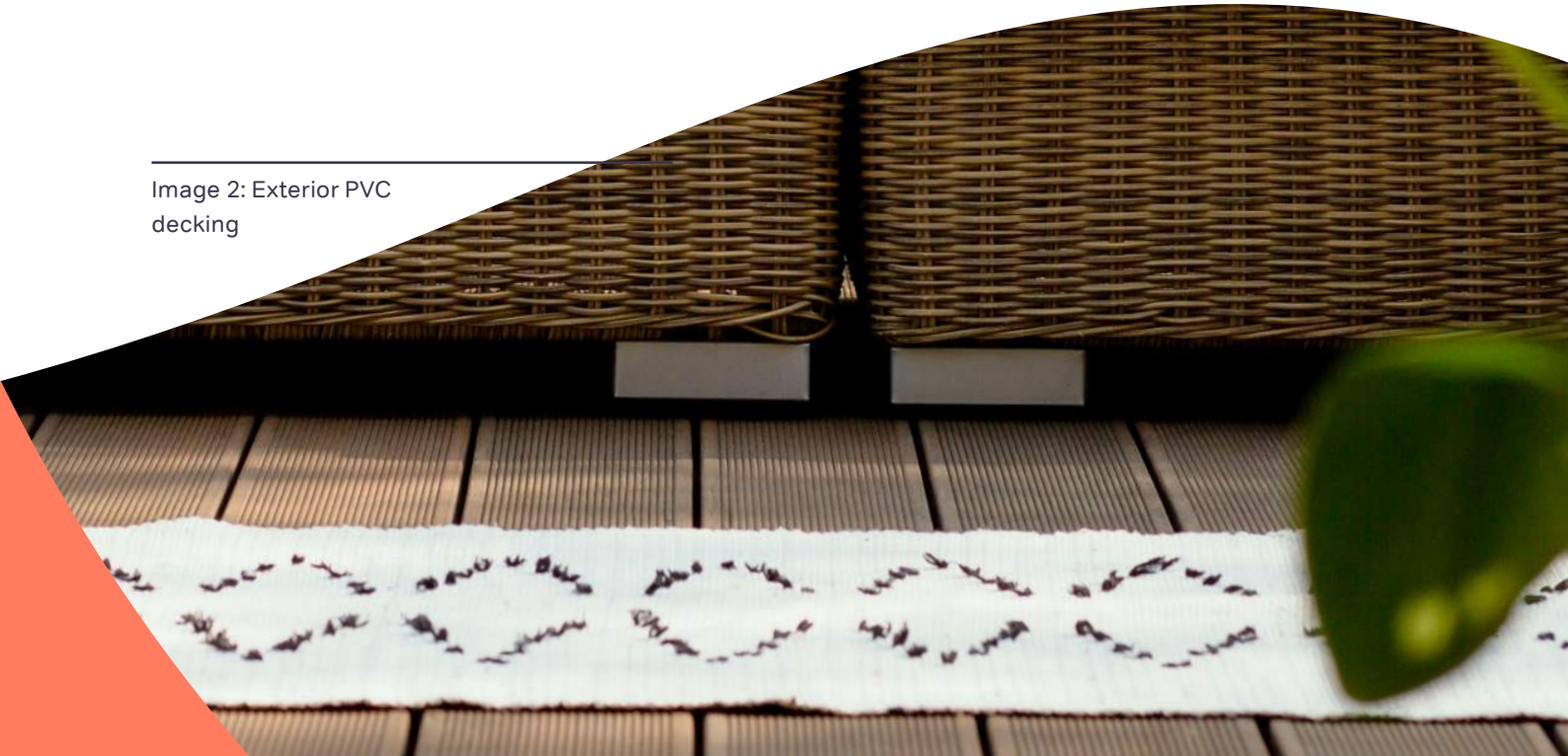

Image 2: Exterior PVC decking

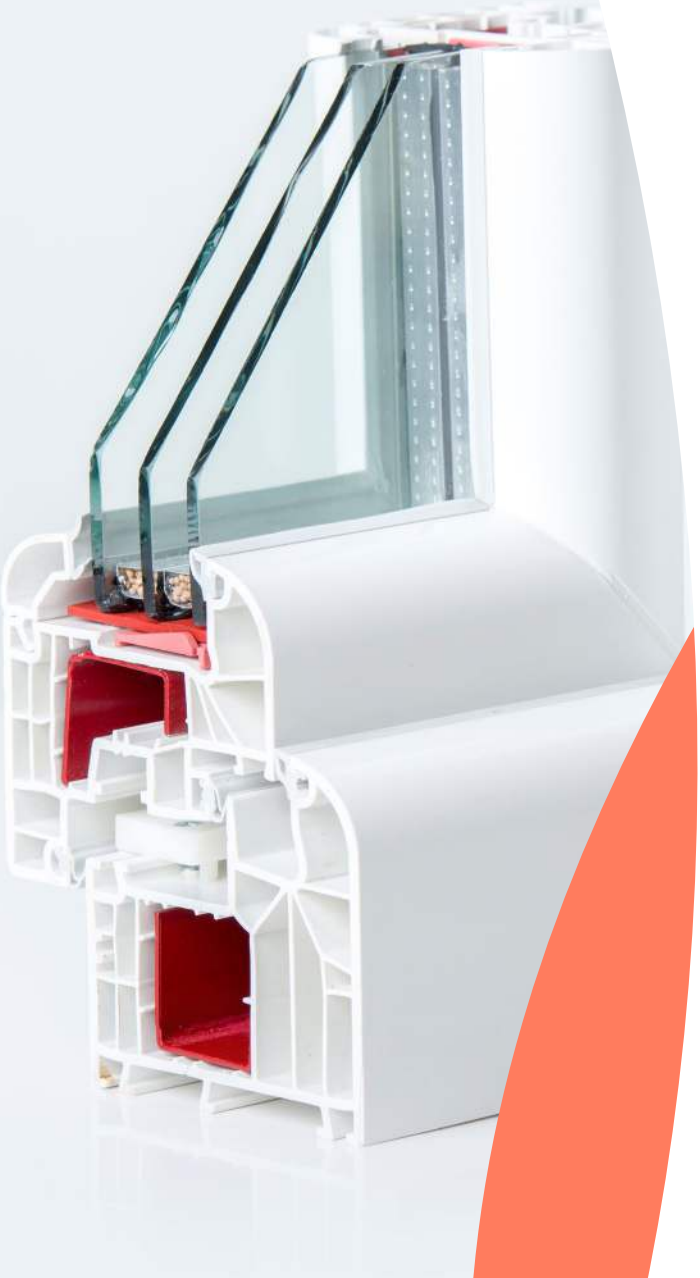

Image 3: Window profile

Final Products

Rigid Profiles

PVC is used to produce extruded Profiles for siding, ceiling, windows, fences, dormers, decking, furniture veneers, compact and foamed sheets, claddings, window boards and trims, fenestration and rainwater gutter.

Longevity (over 50 years), weatherability, low maintenance costs, good isolation (low thermal conductivity translating into energy saving for cooling and heating), easy and flexible design, and recyclability, make PVC the ideal material for these applications.

Pipes

PVC is the material of choice for extruded pressure Pipes, core Pipes, soil and sewer Pipes, land drainage Pipes, conduits and cable or air ducts for HVAC. These applications take advantage of numerous qualities of the material such as durability, chemical resistance, high mechanical properties at lower cost, thermal and noise insulation, a low friction coefficient (translated into pumping energy saving), root intrusion resistance, recyclability, durability, protection against leaks, low maintenance needs and electrical insulation.

Image 4: PVC pipes

Fittings

Injected forms to joint PVC pipes in tees, turns, reductions, elbows, sockets, adapters, couplings, bushings, caps, bends, flanges, stub, clips, nipples, nuts and blinds are also made of PVC.

Gaskets

PVC for flexible applications is used to manufacture injected Gaskets, which prevent leakage in pipeline joints. High mechanical properties, flexibility, chemical resistance and zero migration into water are the key features that make PVC the suitable material for this application.

Adhesives

Pipes made of PVC are used in a variety of residential applications. From plumbing systems to craft projects (such as DIY racks, organizers, and even furniture), PVC can be easily attached to a pipe fitting with cement. This adhesion process works through a chemical solvent that melts the surface of the PVC and quickly re-hardens to fuse the pieces together. The result is an airtight, leak-proof bond similar to welding metal. These cements are prepared as a solution of PVC or copolymers made of vinyl chloride and vinyl acetate in suitable solvents.

Manufacturing Processes

Image 5: Window system

Extrusion

Extrusion is a high-volume Manufacturing Process in which raw plastic is melted and formed into a continuous profile. Extrusion produces items such as pipes and tubings, weather stripping, fencing, deck railings, window frames, plastic films and sheeting, thermoplastic coatings, and wire insulations.

In this process, the plastic material is fed into the hopper and molted by the energy provided by the screw and heaters, to be molded by extrusion through a die maintaining its shape after cooling.

The extrusion of PVC to produce finished products for industrial or consumer applications is an integrated process. The extruder comprise one component of the entire line. In some applications the production lines contain numerous operations, requiring operators to communicate and work together to produce a quality finished product. Finished product may not meet customer specifications for various reasons, including but not limited to:

- Extruder temperature profile is set incorrectly
- Product ingredients are not formulated properly
- Cooling on the extruder feed throat is not running accurately, the melt temperature at the end of the extruder is incorrect
- Cooling bath temperature is not set correctly
- Puller at the end of the line is running at the wrong speed

It is important to recognize that with any incorrect operating condition, the product may not meet customer specifications. Each step in the process adds value, helping the product to reach its maximum value at the end of the line. An improper setting at the beginning of the process may cause the product to be unacceptable at the end of the line after significantly more value has been added. Speeds of the different process steps must be matched to ensure product compliance. Prior to extrusion, PVC should be blended with additives (Stabilisers for heat, oxidative stability and UV stability), color pigments or concentrates, flame retardants, fillers, lubricants and reinforcements. This is required in order to produce the desired product for any profile. The compound is fed to the extruder, where it is melted, mixed, and delivered to the die, shaping the extrudate. After exiting the die, the product is cooled and solidified in the desired shape and pulled away from the extruder at constant velocity to attain the appropriate cross section. Secondary operations, like printing, cutting or rolling can be performed in line after the puller.

Image 6: Fittings

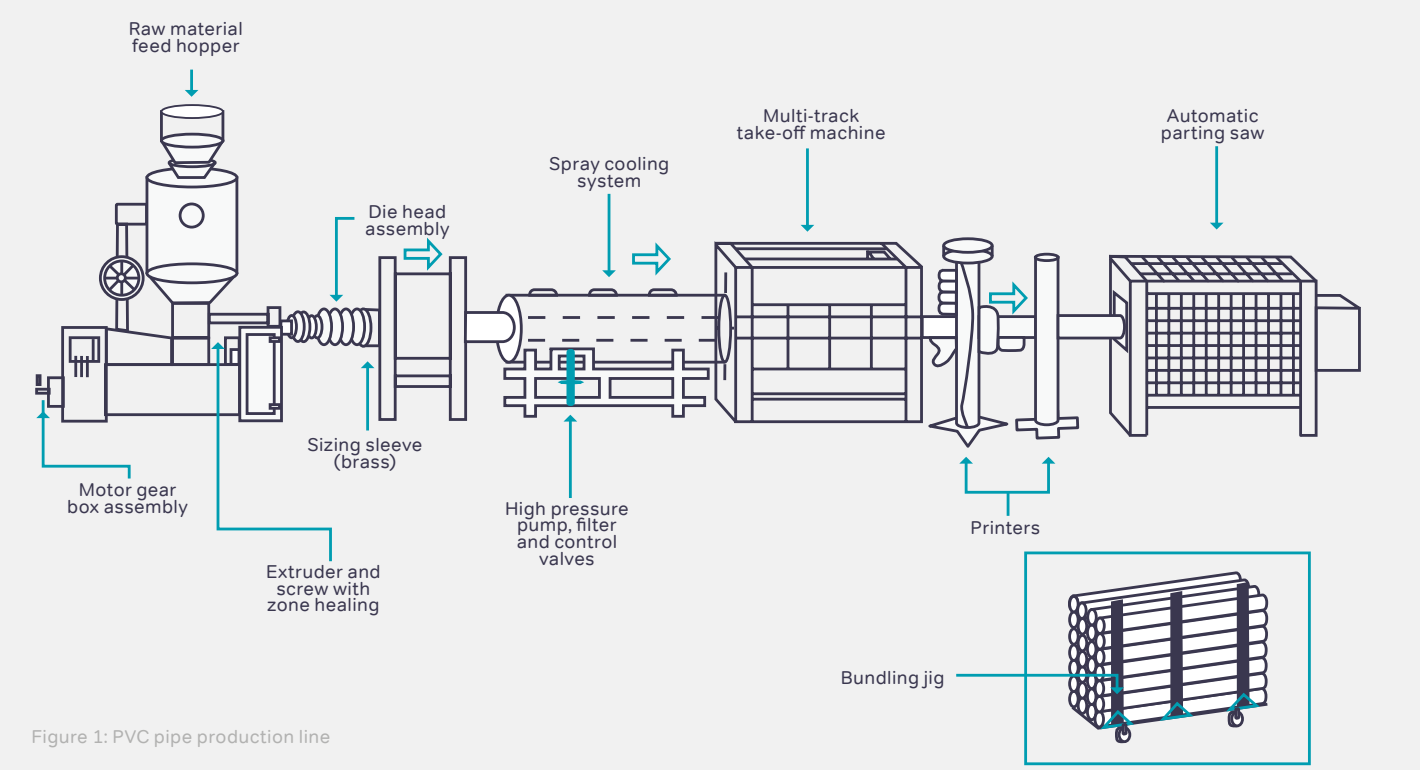

Figure 1: PVC pipe production line

Injection Molding

This is an extended technique for plastics processing. The process basically consists of an Injector machine and a mold, with a hollow form of the final product (with some contraction factors which compensate shrinking at cooling). The cavity is filled under pressure with molten plastic that retains its shape upon cooling. The cavity is filled up with molten plastic which retains its shape as it is cooled.

Below its glass transition temperature (Tg), amorphous polymers will keep their tridimensional shape – like crystalline ones below their melting point. The successful injection of PVC compounds is dependent upon a wide range of variables such as mold design, screw geometry, machine size and shot size.

Mold Temperature

Inlet water temperature should be between 70 and 100 °F (21-38 °C). The ejector side should be about 10 to 20 °F (5-10 °C) colder in order to ease part removal.

Stock Temperature

This will be controlled by a combination of heater band settings, the screw movement and its back pressure. The recommended temperature for the process is specified in the technical data sheet.

Heater Band Settings

For starting purposes, the barrel temperature needs to be set approximately 20 °F (10 °C) lower than the recommended stock temperature. Then, the nozzle temperature is set 10 °F (5 °C) lower than recommended stock temperature.

Screw RPM

A rotation speed of 35 to 50 RPM should be satisfactory for most applications.

Screw Back Pressure

This will vary from machine to machine, but generally 60 to 100 PSIG is recommended.

Injection Speed

Slow to moderate speed at the start, the speed is then increased to moderately fast for the production run. Keep watching for shear burning when increasing the Injection Speed and for freezing at front of the flow when reducing it.

Manufacturing Processes

Injection Pressure

20% to 40% of the available maximum will yield the best consistency.

Holding Pressure

Usually 50% of the injection pressure, just enough to maintain a full part.

Solution

Is the solvation of PVC or copolymer in a suitable, usually liquid chemical which dissolves plastic. The solvent is chosen according to solvency power (Hildebrand parameters), environmental and safety regulations, volatility and performance – drying time and joint strength. Dispersion of the resin prior to solvation is accomplished by initially mixing with poor solvent or cooling. Total dissolution is then achieved by heating and agitation. Solution viscosity, which plays an important role in dosing the right amount in the spread layer during application, can be adjusted with solid concentration, solvent selection or thickeners.

Image 7: Window profile

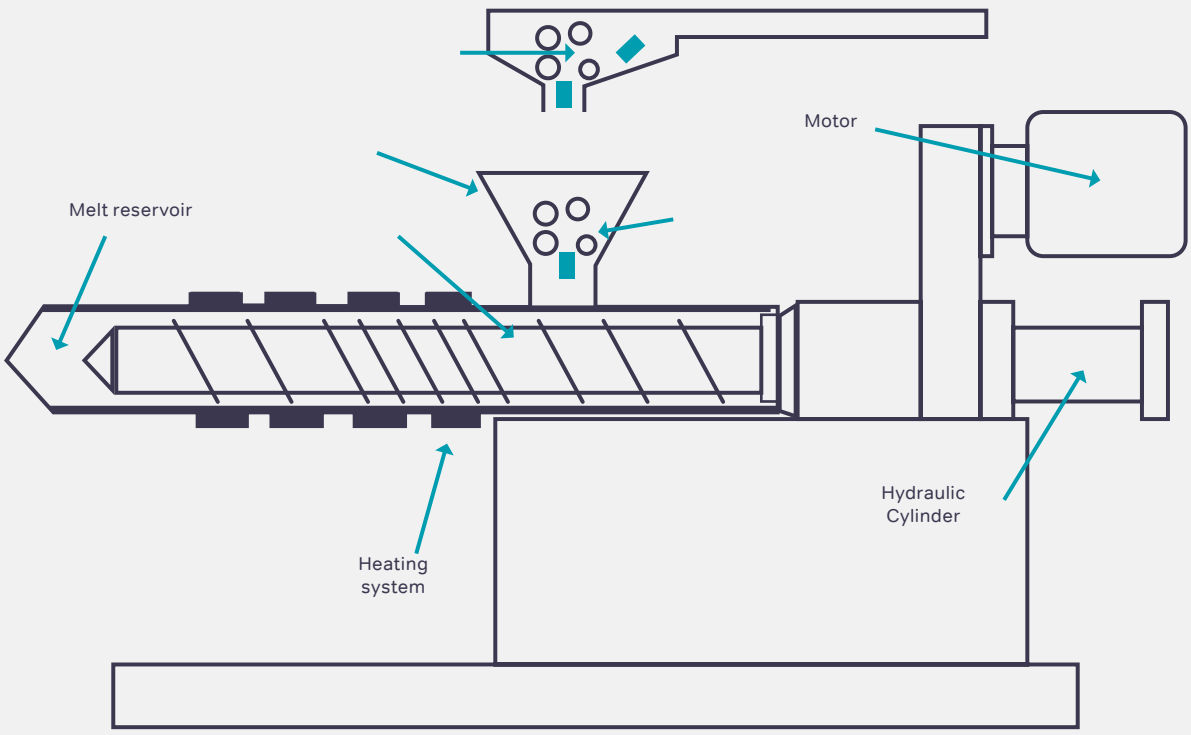

Figure 2: General injection unit

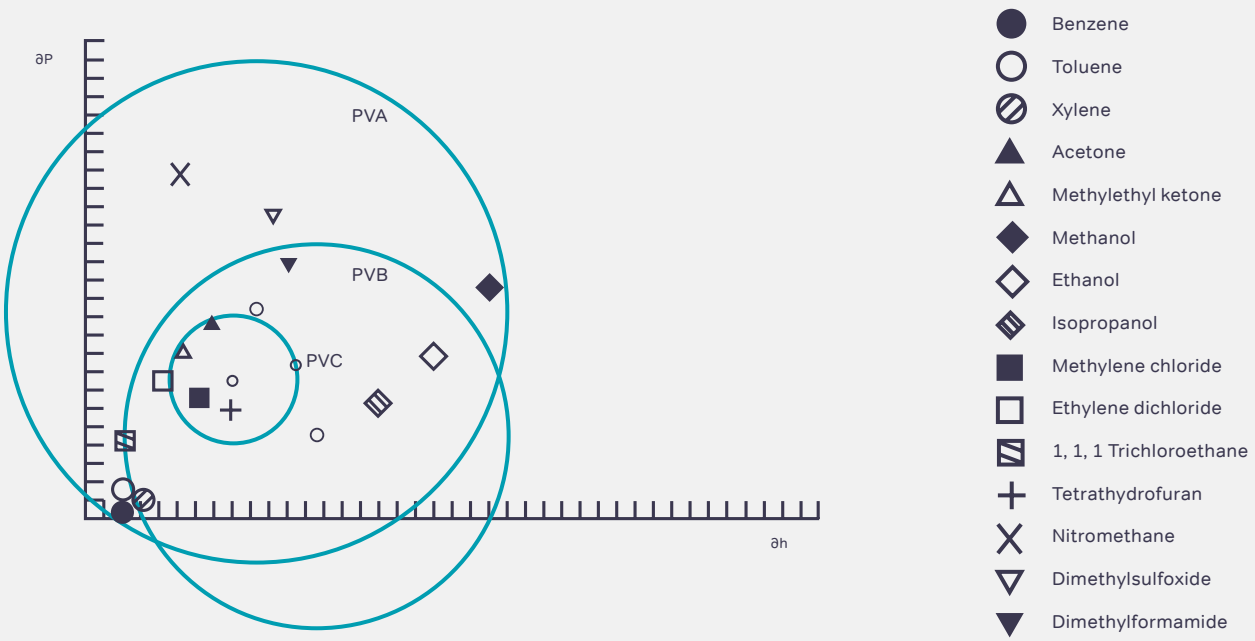

Figure 3: Hansen graph of solubility areas for poly(methyl methacrylate) (MMA) and poly(ethyl methacrylate) (EMA). Liquid parameters are indicated by symbols; small circles indicate center of solubility spheres. Liquids outside the solubility area of a polymer are non-solvents. The dotted line illustrates all the possible mixtures of MEK and Ethanol – notice that MMA will tolerate a greater proportion of Ethanol than will EMA Accordingly, MMA should be soluble in Toluene/Acetone 3:1, but not in 100% Toluene.

Applications

Product code	K values	Profiles & Pipes	Decking / Fences	Pipes	Core Pipes	Fittings	Sidings	Technical Profiles	Tubes / Hoses	Window Profiles
Homopolymers Suspension										
PRIMEX P 160	50	X				X		X		
PRIMEX P 180	57	X			X	X				
PRIMEX PVC 35	57	X			X	X				
PRIMEX P 190	59	X			X	X		X		
PRIMEX S 6058	60	X		X				X		
PRIMEX P 200	61	X	X			X	X	X		
PRIMEX PVC 40	61	X	X			X	X	X		
PRIMEX PVC 445	65	X								
PRIMEX S 6558	65	X		X				X		X
PRIMEX P 225-2	66	X	X	X	X		X	X		X
PRIMEX PVC 440	66	X	X	X	X		X	X		X
PRIMEX S 6658	66	X		X				X		X
PRIMEX G 34	67	X							X	
PRIMEX PVC 450	67	X							X	
PRIMEX G 30	70	X							X	
PRIMEX G 30 HP	70	X							X	
PRIMEX PVC 500	70	X							X	
PRIMEX P 250	70	X							X	
PRIMEX PVC 500 F	72	X								
PRIMEX PVC 550	75	X								
VESTOLIT E 6007	60	X		X			X	X		
VESTOLIT E 7004	70	X								
VESTOLIT E 7037	70	X		X				X		
VESTOLIT G Impel S 100	70	X		X				X		
VESTOLIT G Atlas S 140	82	X						X		
VESTOLIT G Atlas S 162	87	X						X		
VESTOLIT G Atlas S 180	92	X						X		
VESTOLIT G CG 10		X								
Homopolymer Suspension with impact modifier										
VESTOLIT P 1382 K	60	X								
PRIMEX P 1982 K	65	X		X				X		X

Table A: Product overview for Profiles & Pipes

Locations

Vestolit Europe

Vestolit GmbH
Paul-Baumann-Str. 1
45772 Marl
Germany
T +49 2365 9549-100

Customer-Service.Germany@vestolit.com
Technical-Service.Germany@vestolit.com

Vestolit LATAM

Mexichem do Brasil
Representação Comercial Ltda.
Doutor Plácido Gomes Street, 610
Office 202
Joinville - Santa Catarina
Zip Code: 89.202-050
Brazil
T +47 3013-6480

Mexichem Resinas Colombia S.A.
Oficina de Bogotá
Autopista Sur # 71 - 75
Bogota, Colombia
T +57 (1) 782 5060

Mexichem Resinas Vinílicas S.A. de C.V.
Boulevard Manuel Ávila Camacho 2610
Torre B, Piso 12
Colonia Valle de los Pinos
Tlalnepantla de Baz, CP 54040
Mexico
T +52 5 553 66 40 00

Customer-Service.LATAM@vestolit.com
Technical-Service.LATAM@vestolit.com

Vestolit USA

Mexichem Specialty Resins, Inc.
33653 Walker Road
P.O. Box 277, Avon Lake, Ohio 44012-0277
USA
T +1 (877) 226 7355

Customer-Service.USA@vestolit.com
Technical-Service.USA@vestolit.com

Imprint

info@vestolit.com
www.vestolit.com

Image Sources

Front page:	shutterstock
Image 1:	shutterstock
Image 2:	envato
Image 3:	freepik
Image 4:	shutterstock
Image 5:	freepik
Image 6:	shutterstock
Image 7:	shutterstock

Vestolit's Application Brochures

Artificial Leather
Commercial Graphic Films
Film & Sheets
Flooring
Medical Devices
Profiles & Pipes
Sealants
Technical Coatings
Textile Coating
Wallpaper
Wire & Cables

vestolit

About Orbia

Orbia is a company driven by a shared purpose: to advance life around the world. The five Orbia business groups have a collective focus on expanding access to health and wellness, reinventing the future of cities and homes, ensuring food and water security, connecting communities to information and accelerating a circular economy with basic and advanced materials, specialty products and innovative solutions.

orbia
Advancing life together

Polymer Solutions